Tub Bowl Pattern (Front and Side)

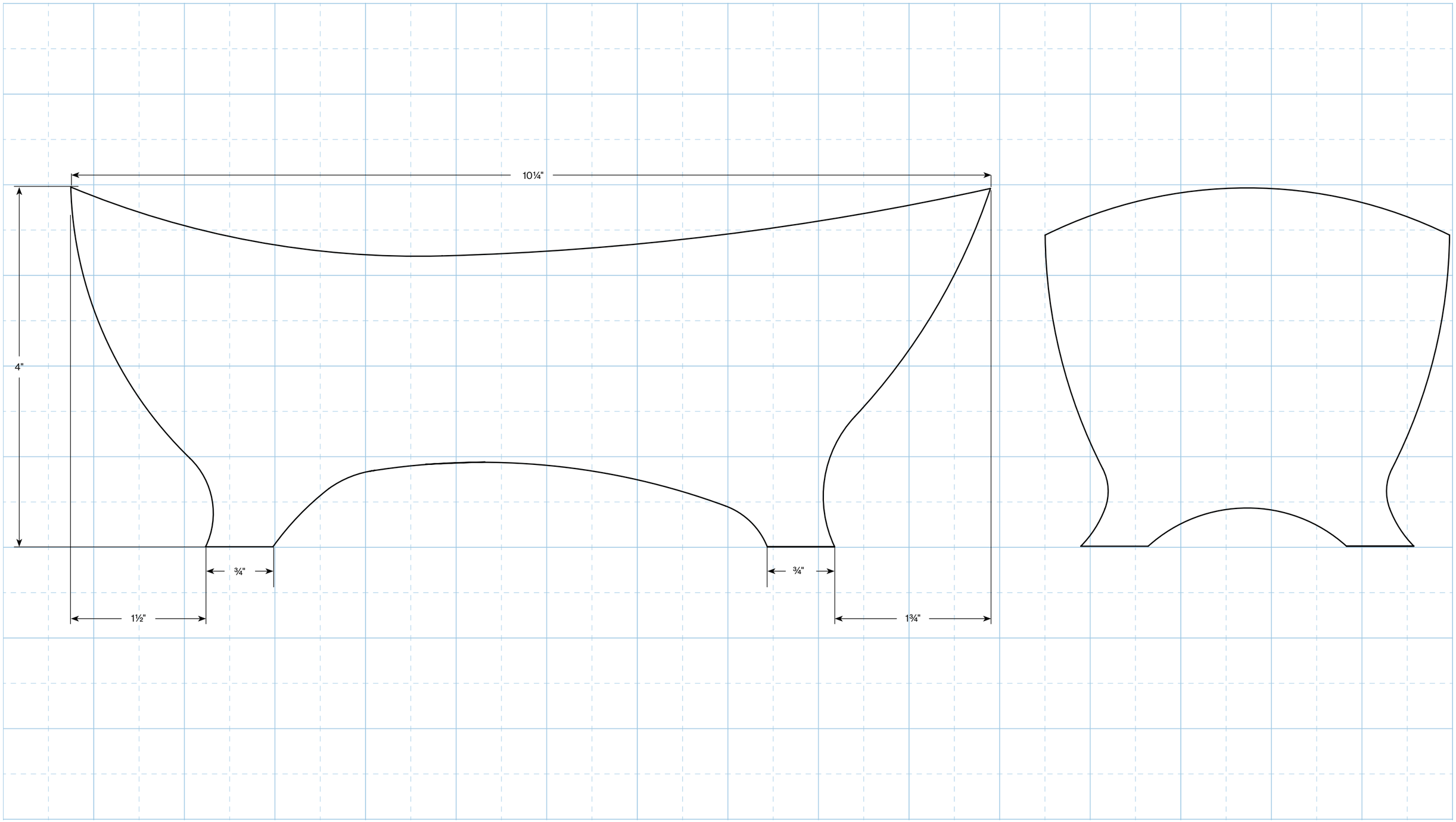

Actual size

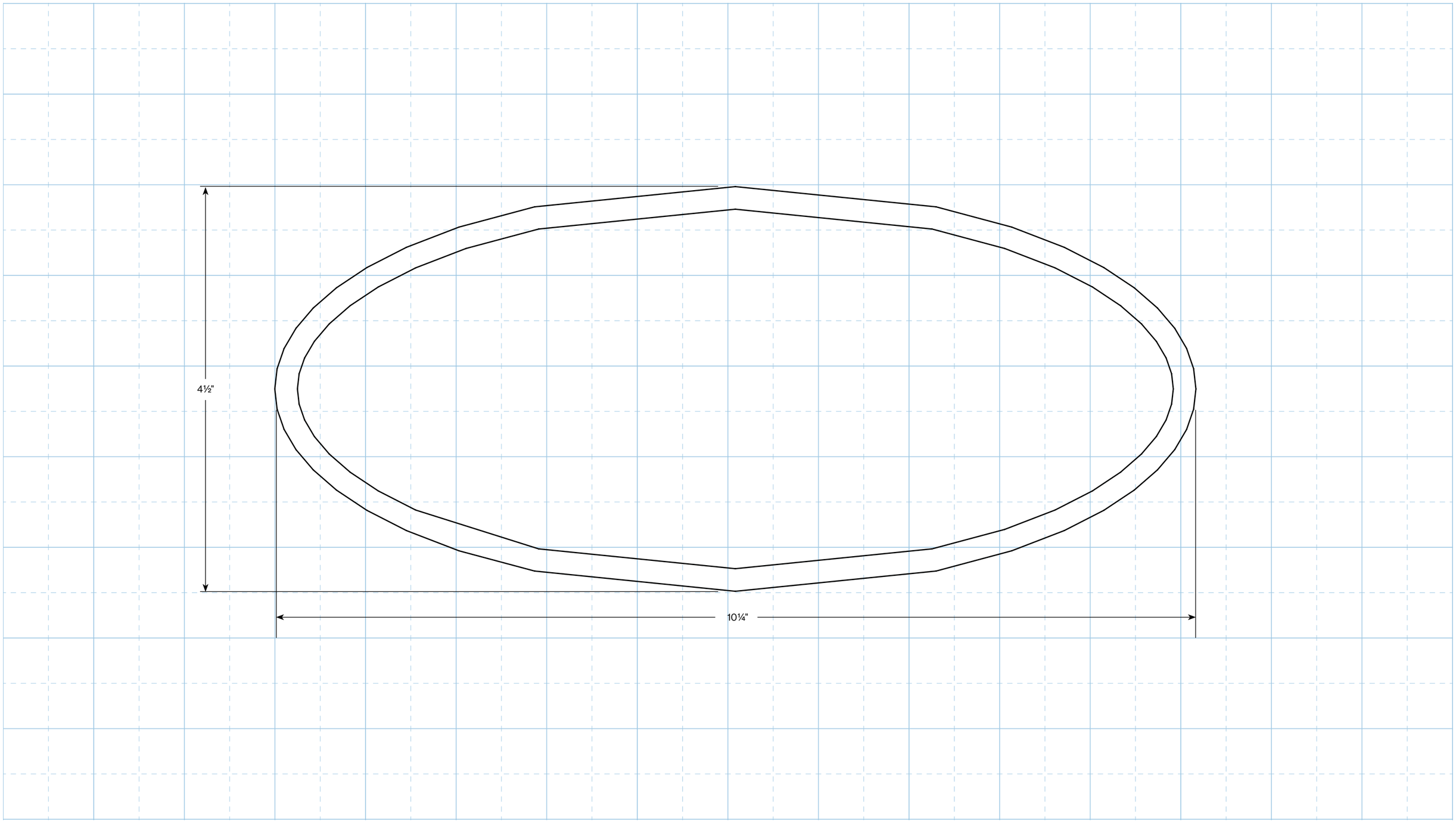

Actual size

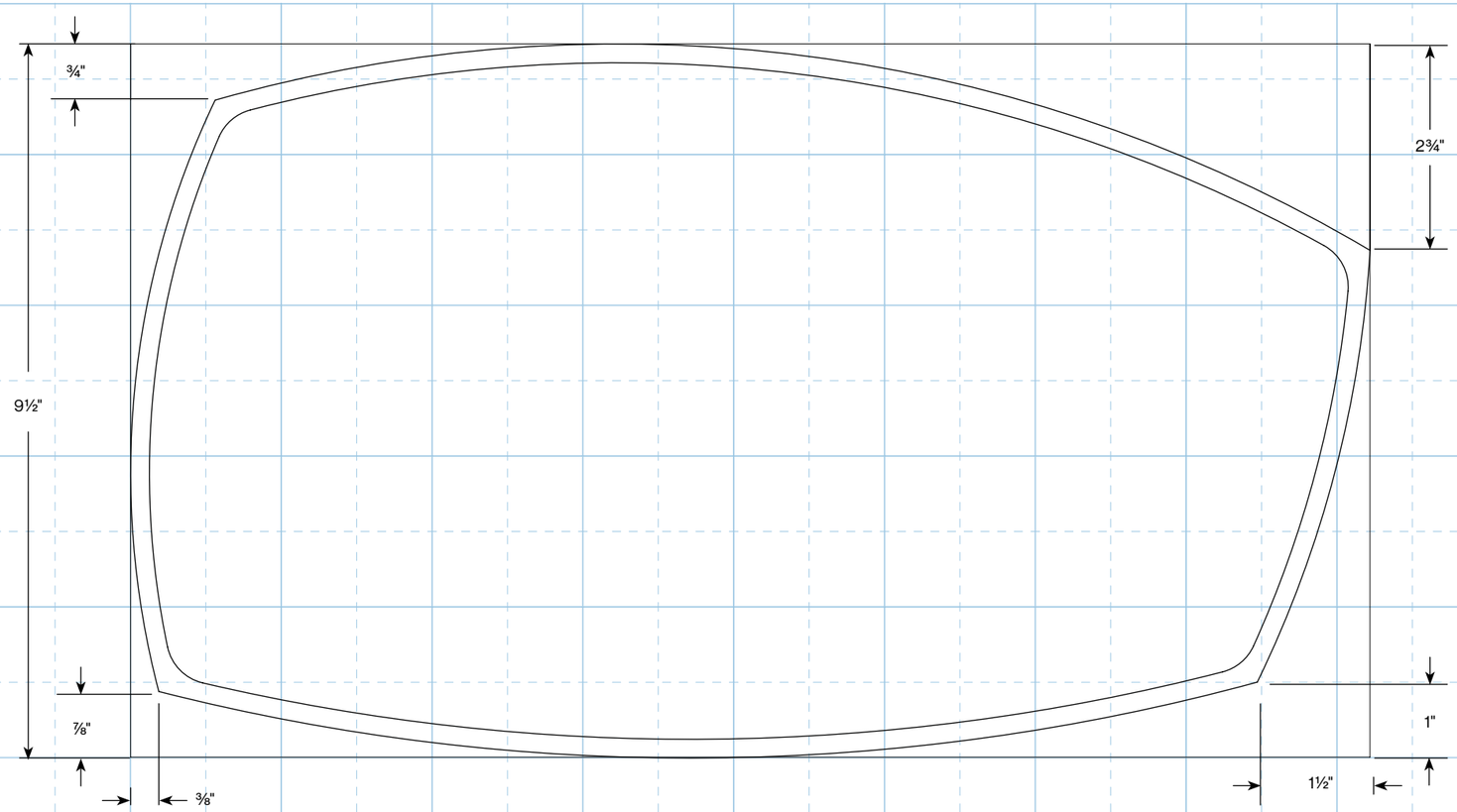

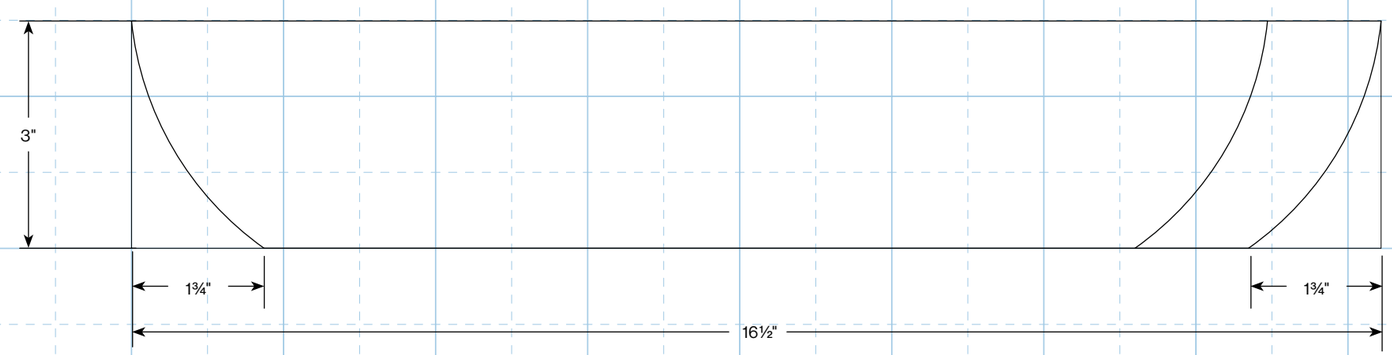

50% scale— enlarge pattern by 200% for full size

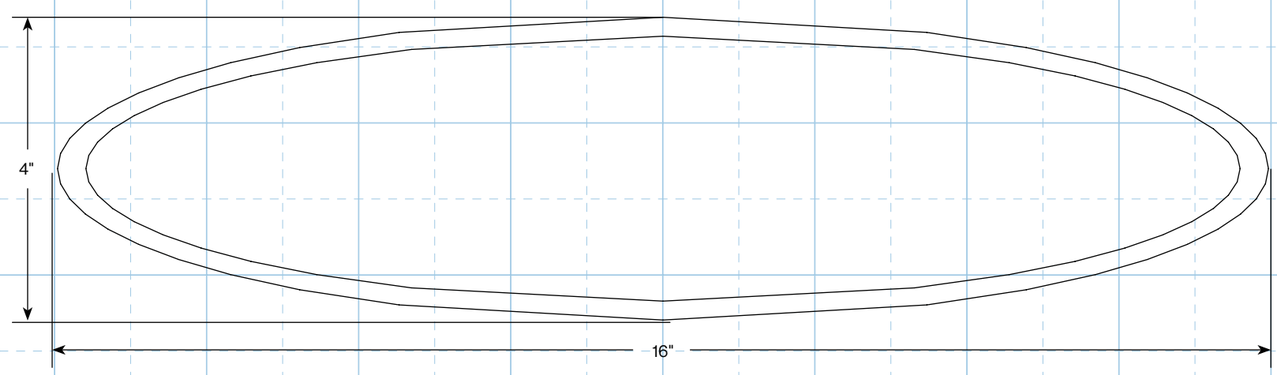

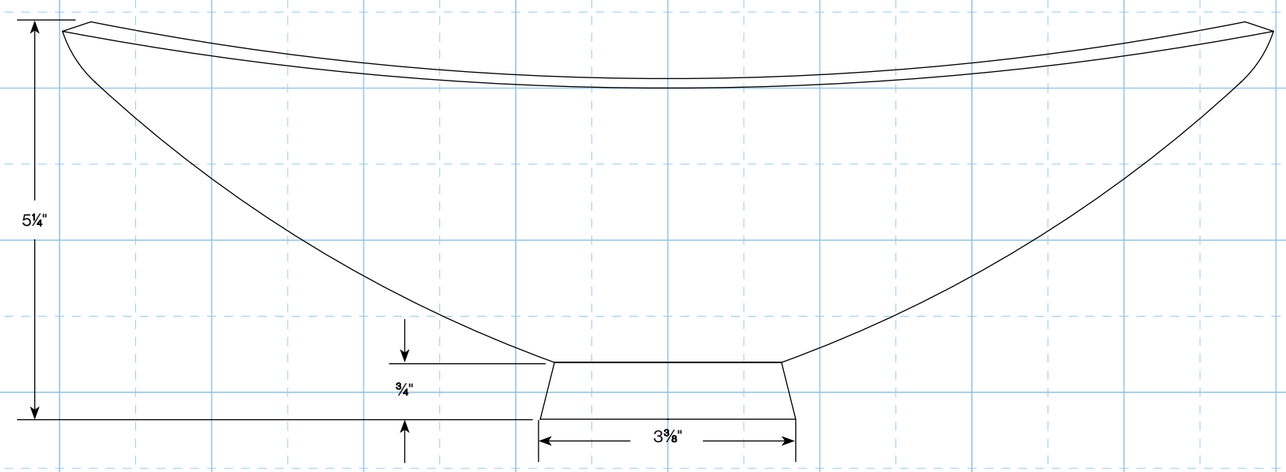

50% scale— enlarge pattern by 200% for full size